ISBN: 978-1-948012-05-8

Contents List available at VOLKSON PRESS

Intelligent Computing and Information Engineering (ICIE)

DOI : http://doi.org/10.26480/icie.01.2017.23.25

Journal Homepage: : https://www.intelcomp-design.com/

Design and Simulation of Electronic Calendar Based on 51 Single Chip Microcomputer

Qixian Liu[1], Chao Zhang[1,*], Kun Wang[1] ,Zhikun Yang[1]

[1]College of Physics and Electronic Information, Yunnan Normal University, Kunming, China
[2]College of Information, Yunnan Normal University, Kunming China
*zhchynnu@foxmail.com

ARTICLE DETAILS

Article History:

Received 12 May2017
Accepted 12 July 2017
Available online 14 September 2017

Keywords:

Proteus; AT89S51; electronic calendar; DS18B20 temperature sensor.

ABSTRACT

This design use the microcontroller design electronic calendar needs of a careful analysis, and then designed the hardware part of the circuit diagram, the use of Keil software to write the required procedures, and finally in the use of Proteus software simulation and debugging. The main function of the electronic calendar is intuitive and accurate to provide people with time and date information, and in order to coordinate the work of electronic calendar, the entire system from the function can be divided into the Gregorian calendar, lunar calendar, temperature, week display, buzzer alarm and keyboard six Modules, respectively, to complete the calculation of time and date, easy to read, versatile, in modern life plays an important role.

1. Introduction

Based on the single-chip electronic calendar with a combination of the clock and calendar functions, the two will be integrated in the display time can also display the date and year, month, it is mainly through the microcontroller to read the clock chip time, date, and then sent to the display device displayed [1]. The use of single-chip technology designed electronic calendar, can be easily programmed by the software to adjust and improve the function, so that it can accurately show the year, month, day, week, but also has a lot of expansion capabilities. Such as the conversion of yin and yang, temperature display, time calibration, alarm, etc., there is a certain degree of novelty and practicality, and is used in 12864 LCD display, night can also be night vision.

2. HARDWARE DESIGN

2.1. Circuit Design Block Diagram

Hardware part I used the AT89S51 as the master chip, the calendar clock chip is used by DALLAS company launched high-performance, low power consumption, with RAM real-time clock DS1302 [2]. The design of the electronic calendar is mainly composed of six parts, the system design block diagram shown in Figure 1 below:

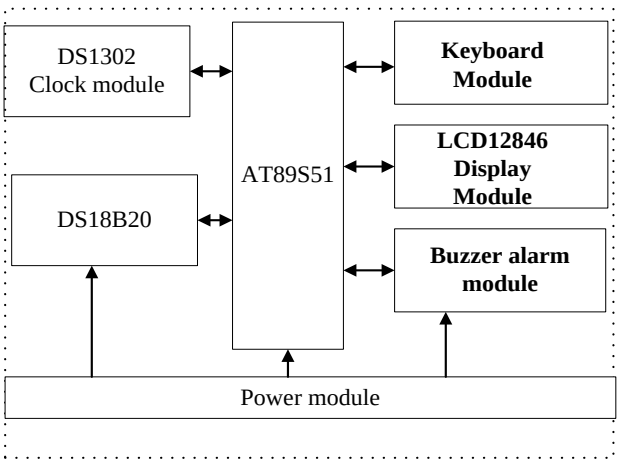

Figure 1: The module of System Block Diagram

Then use the digital temperature sensor DS1302 to detect temperature, And the results will be detected with 12864 displays, and finally through the button to set the calendar time, the detailed description of each hardware in the back of the module design.

2.2 System Hardware Overview

2.2.1. SCM main control module design

This design I use the AT89S51 as the main control module, which in addition to increasing the ISP online programming functions, but also added many new features, such as to further improve the operating frequency, but also integrated within the watchdog timer, greatly improving the confidentiality of the program [3]. At the same time AT89S51 completely compatible with the MCS-51 all sub-series products, but in the simulation library cannot find AT89S51 single-chip, so in the Proteus simulation, I use the AT89C51 (both the simulation function is the same). It is produced by the US ATMEL company, there are 40 pins, the internal integration of the CPU, memory and input or output interface circuit.

(1) central processing unit (CPU)
The core of the microcontroller is the central processing unit, mainly to complete the operation and control functions, the design program uses the C language, and can handle 8-bit binary or code operations.

(2) Internal data memory (128B RAM)
In the 51 chip a total of 256 RAM units, we put the 256 RAM unit is divided into two storage space, one is the internal storage space, another external storage space [4]. Among them, only the first 128 units for the user to use the register, is the real RAM storage area, it is used to store readable data, referred to as internal RAM, followed by 128 units occupied by a dedicated register, also known as Special function registers;

(3) Internal program memory (4KB ROM)
The internal program memory has a total of 4KB mask ROM, which is used to store the program or raw data. We call it the data memory, referred to as the internal ROM.

(4) timer / counter
The MCS-51 has two 16-bit timers / counters, which are used to count the time and count, and take the result of it to control the computer.

(5) clock circuit
The internal clock signal of each circuit is generated by the clock circuit, and the higher the frequency, the faster the internal circuit speed, the system allows the crystal frequency of 6 ~ 12MHz.

2.2.2 DS1302 clock circuit module design

DS1302 is produced by Dallas a high-performance, low power, with RAM real-time clock chip, which is mainly through the serial mode and with the microcontroller for data transmission, not only to the microcontroller, including seconds, minutes Day, week, week, month, year, etc., but also can automatically adjust the leap year, the end of the date of the date, it is corrected to the correct information, you can set the clock operation by instructions to 24 or 12h format [5].

DS1302 clock chip mainly by the oscillator, shift register, control logic circuit which is composed of several parts, it relies on the RST reset, I / O data lines, serial clock line SCLK three end to complete the microcontroller system data transfer.

3. SYSTEM SOFTWARE DESIGN

3.1. System flow diagram

This time I designed the electronic calendar is carried out in the scope of program control, to take the hardware and software combined with the way. The whole function is divided into several different program modules, respectively, design, programming, modification and debugging, and finally through the main program will be connected to the various program modules in turn [6]. Among them, the system software design I used the C language coding, the design method is written in Keil software source code, after the preparation of the preservation, and then compiled in the software. DS1302 block diagram.

After running the DS1302 program, the program is first initialized, and then the DS1302 Gregorian calendar calculation program is set up to obtain information such as year, month, day, and week of the Gregorian calendar. And then run the button to scan the required program to detect whether there is no button to press, if there is no button to press, directly call the lunar calendar program, according to the date of the date information to calculate the lunar date, and the corresponding lunar calendar is calculated from the lunar calendar calculation procedure according to the modified variable, so as to realize the conversion of the lunar calendar and the Gregorian calendar.

We can clearly see the results of the simulation show, while showing the Gregorian calendar, lunar calendar, week, time, temperature. When we adjust the different keys, the display results have changed, for example: when K1 is closed, adjust the opening K4 can be seen as shown in Figure 2 below:

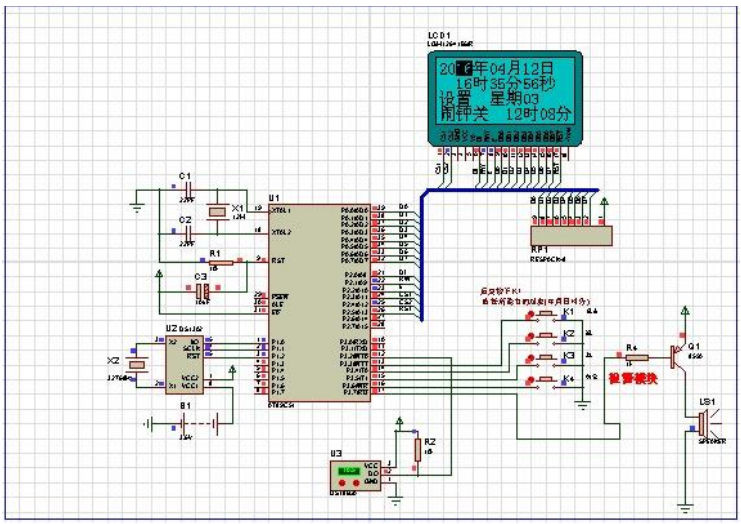

Figure 2: Electronic calendar simulation diagram

We see the black part of the selected cursor, you can press the button, adjust the keys K2 and K3, you can achieve the year, month, day, week plus and subtract and set the alarm clock switch, in order to achieve our design demand.

4. SYSTEM DEBUGGING AND IMPLEMENTATION

Debugging is divided into hardware debugging and software debugging, of which the main software debugging. Hardware debugging is relatively simple, mainly to detect whether the hardware circuit is short circuit, open circuit, Weld and so on. Software debugging can be prepared to display the program and the correctness of the hardware test, and then the main program, read time, read the temperature subroutine, temperature conversion command subroutine, the calculation of temperature subroutines and other subroutine programming and debugging, The DS12C887 only need to be initialized and ensure that the correct choice of CS chip address and status register parameters are set to correct the normal time to read.

5. SUMMARY AND PROSPECT

The design of electronic calendar is mainly realized from hardware and software. After testing, the electronic calendar designed in this paper shows the advantages of year, month, day, hour, minute, week, temperature and timing, timekeeping and remote-control function. Electronic timer development trend, with broad market prospects. In my step-by-step debugging, the purpose is to show the date and time of the calendar, as well as real-time temperature, simple design, easy debugging, low cost and low power consumption. Modular design ideas, design and development cycle is short, the various modules with independence, there is a lot of room for expansion.

ACKNOWLEDGEMENT

The work of this paper has been funded by the Science Research Fund of Yunnan Provincial Department (No.2015Y102) and college student's innovation and entrepreneurship training project of national (based on SONY low-light CCD chip camera motherboard development) funding.

REFERENCES

[1] Dongfeng, W., Park, C., Xiangyang, G. 2015. SCM C language application of 100 cases. Electronic Industry Press, 3-5.

[2] Ping, W.H., Renbo, W., Ming, H.K. 2008. Design of calendar and Proteus simulation based on AT89C51 single chip microcomputer. Technology Square, 10, 197-198.

[3] Zhenfang, T., Kun, Z. 2010. Design of Electronic Calendar Based on Single Chip Microcomputer. Value Engineering, 29 (6), 63-63.

[4] Wanyu, Q., Yinghong, M., Man, S. 2003. We have the method and technique of temperature detection with DS18B20. Journal of Instrumentation, 24 (z2), 235-236.

[5] Xinhong, L., Futian, G., Zhenxing, S., Lili, Z. 2007. Application of Markus Simulation Technology in Single Chip Microcomputer Teaching. Journal of Experimental Technology and Management, 6 (7), 262-264.

[6] Xu, X. 2011. Simulation of temperature and humidity control system based on Proteus. Electric Engineering and Computer, 10 (11), 186-188.